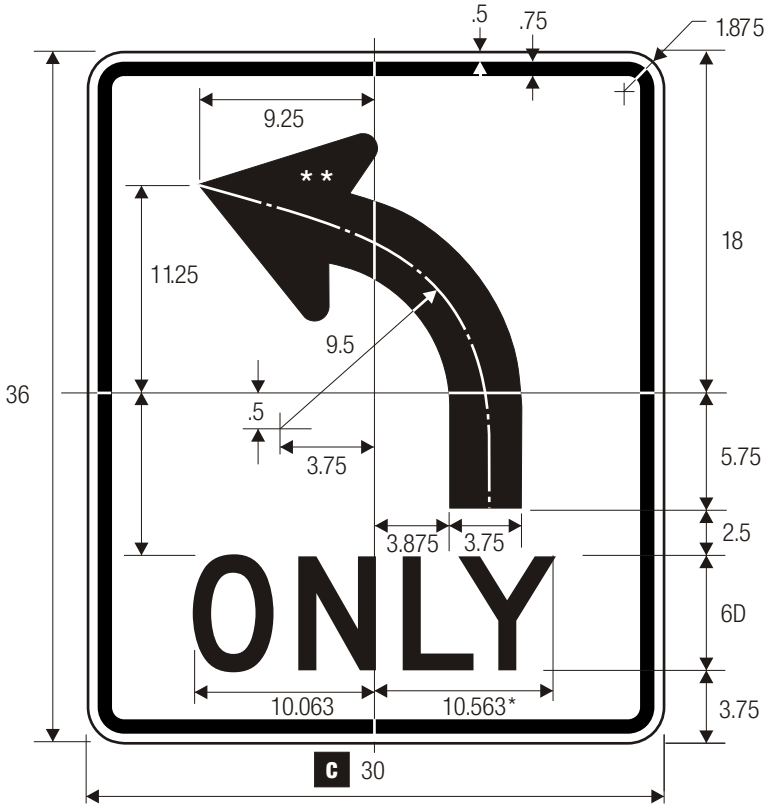

R3-5R

*Reduce spacing to fit.
**See page 6-2 for design details.

R3-5L MANDATORY MOVEMENT LANE CONTROL

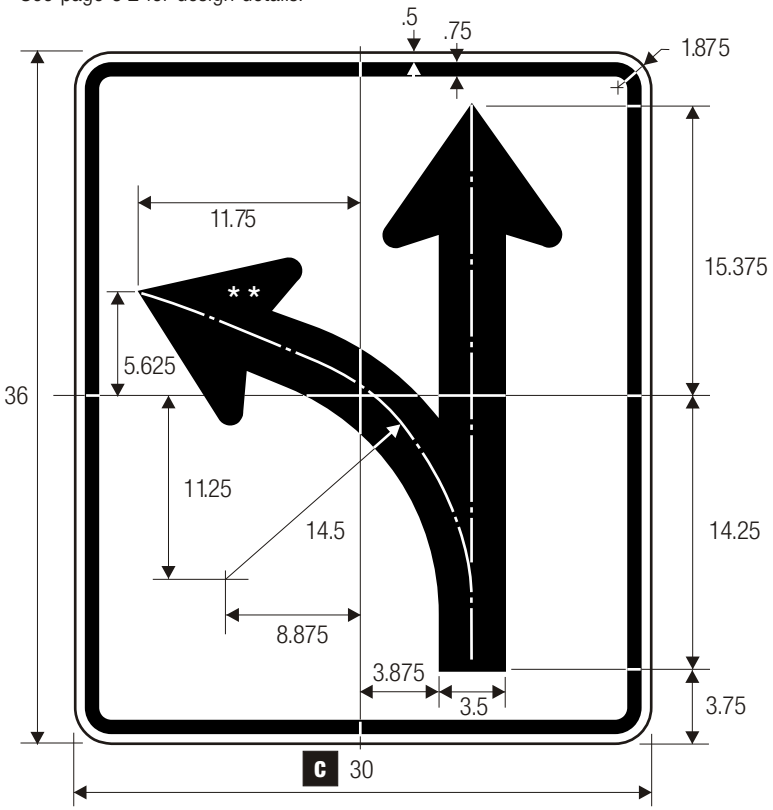


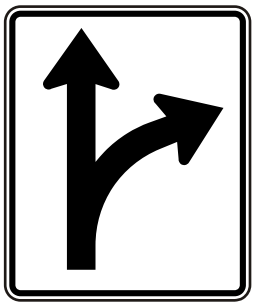

***Optional, add letters.

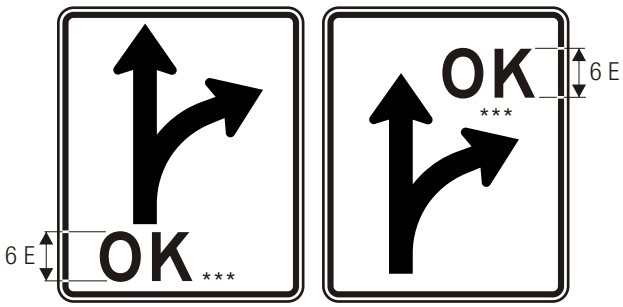


R3-6R

R3-6L OPTIONAL MOVEMENT LANE CONTROL

COLORS: LEGEND – BLACK
BACKGROUND – WHITE (RETROREFLECTIVE)